Midlothian Council
Standards for Development Roads

LTG011

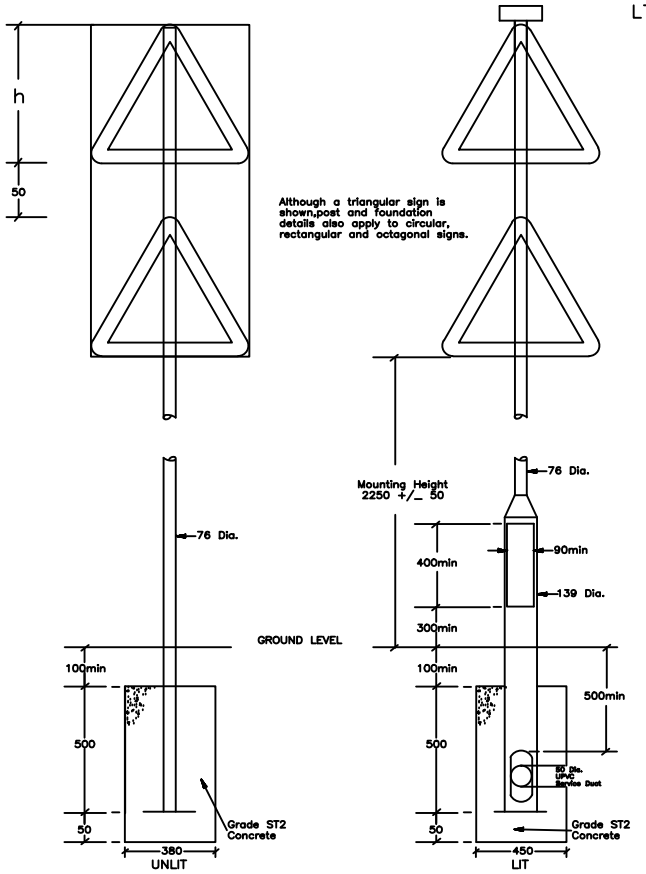

NOTES:-

1. All dimensions in millimetres unless otherwise shown
2. Reference to Circular signs also include the Octagonal sign to Dia.601.1 of the Traffic Signs Regulations and General Directions 1981.
3. Columns to be finished to colour BS4800 00A05

Rev	Details	By	Date

LIGHTING STANDARD DRAWING

TYPICAL
SIGN DETAIL (DOUBLE)

Date : March 2017
Scale : N.T.S.
Drawn by : R. Hoggan
Checked by : K. Slight

Drg. No. LTG011