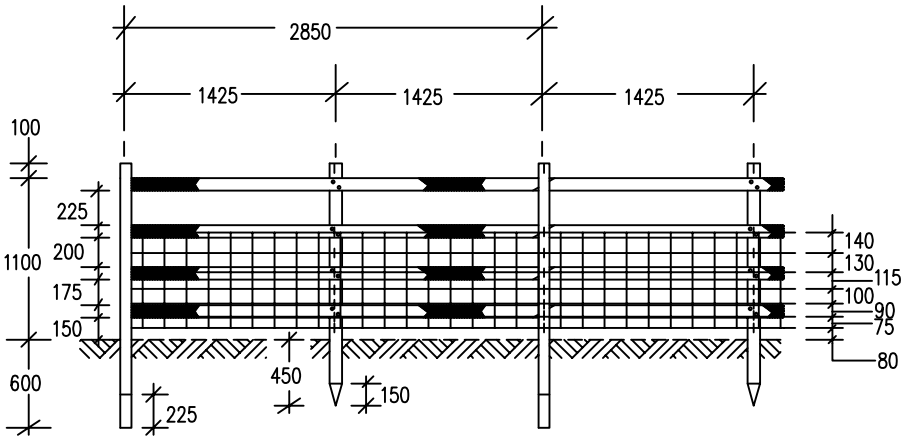

ELEVATION

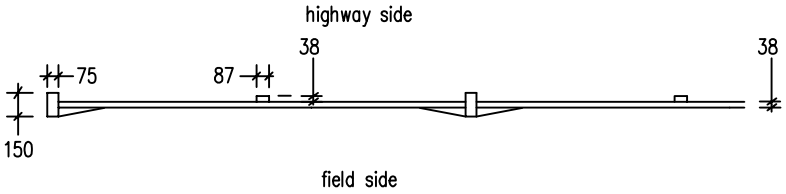

PLAN

NOTES

All dimensions in millimetres.

Fencing to be to BS.1722:Part 7.2006 Type MPR 11/4 (4 rail) unless as otherwise stated below.

Dimensions (mm)

Main post	1800 x 75 x 150
Prick post	1650 x 38 x 87
Rails	38 x 87

If posts are to be driven the butt and shall be pointed. If posts are not driven, the post holes shall be carefully backfilled and rammed as filling proceeds.

Rails shall fit into mortices in the main posts, and shall be nailed to each prick with two nails. Joints in rails shall be scarfed, the length of the scarf being not less than 150mm.

Nails shall be 100mm. x 4mm. to BS 1202–1 and hot dip galvanised to BS EN ISO 1461

Woven wire mesh to be style 8/80/15 to BS 1722 Part 6 2006 Mesh to be fixed to all posts by 1 No. 40mm. x 4mm. galvanized staple per wire. Mesh to be fixed to top and bottom rails at 300mm intervals by 40mm. x 4mm. galvanized staples.

MIDLOTHIAN COUNCIL Roads Services	FOUR RAIL FENCING 1.100m HIGH WITH TIMBER POSTS AND WOVEN WIRE	DATE: Mar 2013 No.3155